USED ON
–

DWG NO. C-110696

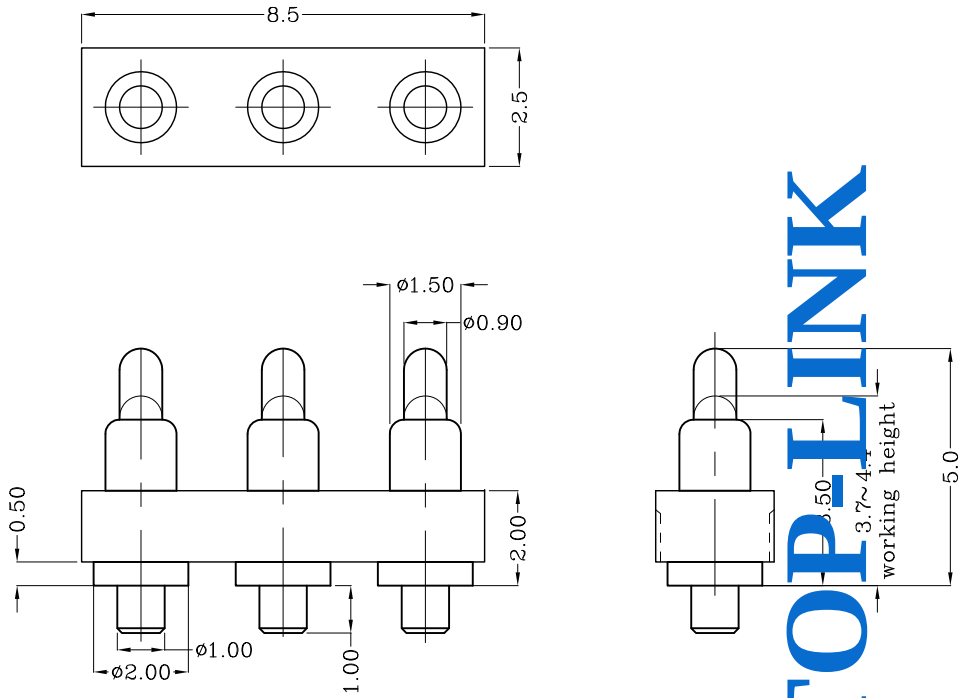

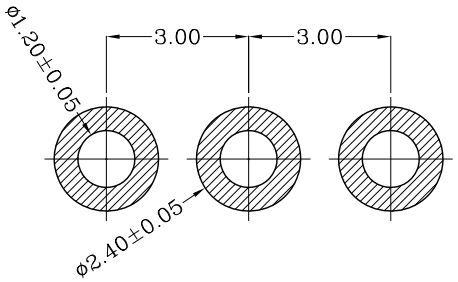

Recommended PCB Layout

Notes:
1 Material, Housing: PA 4.6 (30% Glass Filled)
Color Black.
Contact: Brass
2 Mechanical demands:
Plating Plunger: Min 0.4um Au over 1.4um Ni
Plating Body: Min 0.1um Au over 1.4um Ni.

110696-3
PART NUMBER

DIMENSIONS IN MM
TOLERANCES UNLESS
OTHER SPECIFIED
0 = ±-
0.0 = ±0.15
0.00 = ±0.10
0.000 = ±
ANGLE: ±1°
SURF TEXTURE: 3.2
REMOVE BURRS. BREAK
SHARP EDGES R0.05 MAX
DO NOT SCALE PRINT

MATL 1	HT TR —	FIN —	
DWN Qin	APVD	Top-Link Electronics Ltd.	
CHK	REL		
NAME POGO 3P PGC-1.5-5.0-R-3P-3.0PH			
SCALE 1:1	A4	DWG NO. C-110696	SHEET 1 OF 1	REV 1

LTR	REVISION RECORD	APVD	DATE
	NEW		2011/02/15

LOC –
DIST –

THIS INFORMATION IS CONFIDENTIAL AND IS DISCLOSED TO YOU ON CONDITION THAT
NO FURTHER DISCLOSURE IS MADE BY YOU TO OTHER THAN TOP-LINK PERSONNEL WITHOUT
WRITTEN AUTHORIZATION FROM TOP-LINK LTD.